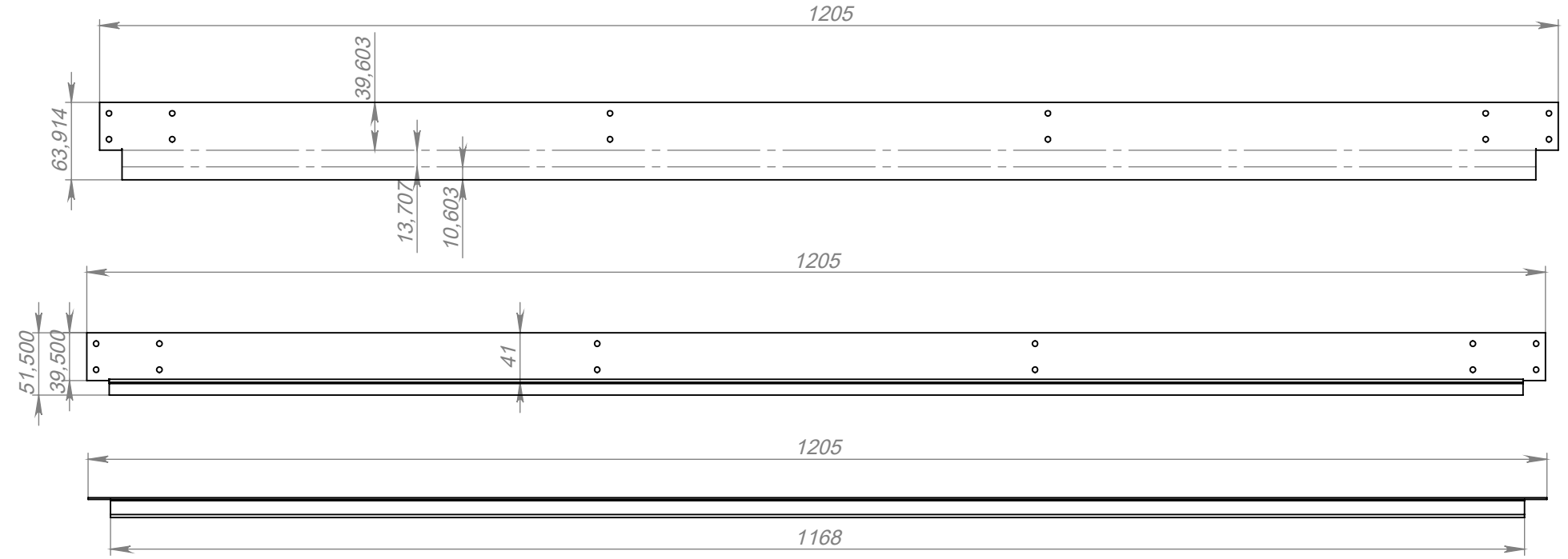
1205
39,603
63,914
13,707
10,603
1205
51,500
39,500
41
1205
1168

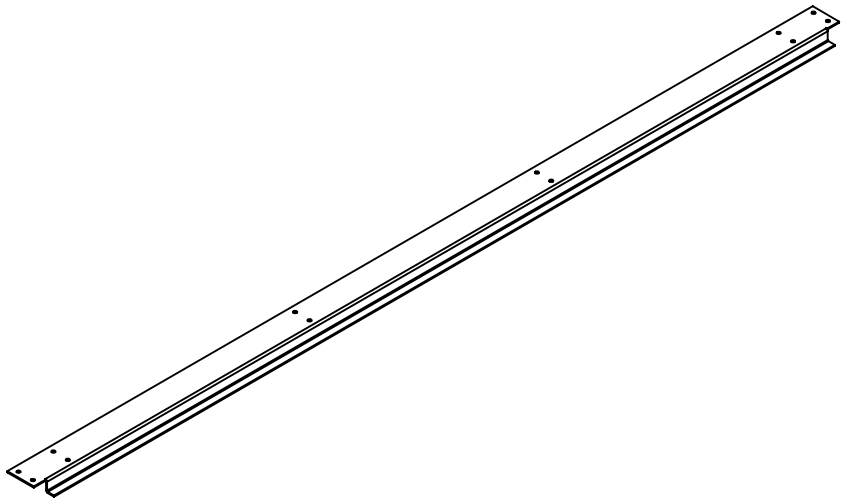

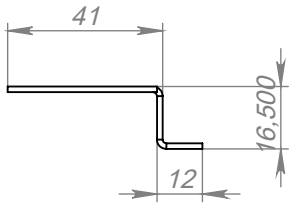
41
16,500
12